SMT Shielded Power Inductors

FRONT VIEW

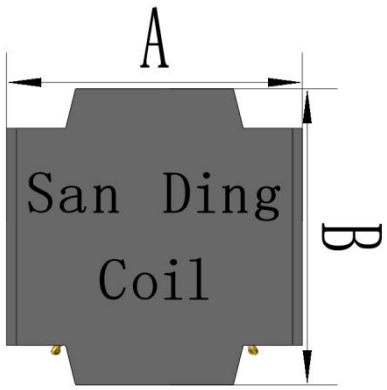

SIDE VIEW

BOTTOM VIEW

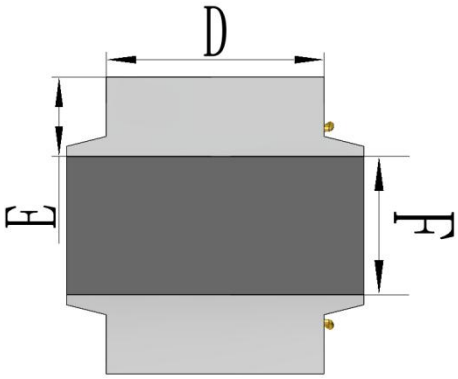

APPEARANCE DRAWING

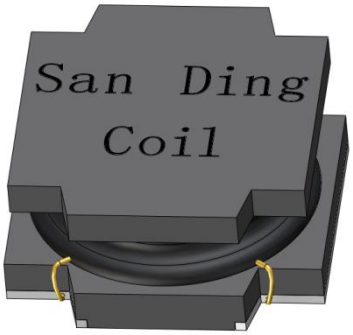

SCHEMATIC

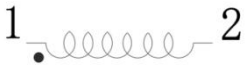

RECOMMEND PC BOARD PATTERN

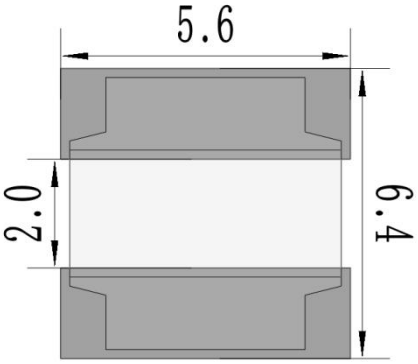

◆ Product Identification

—SDCR6028 -_____ _____

1 2 3

(Ex. SDCR6028-1R0N)

1—SMT Shielded Power Inductors

2—Inductance

3—Tolerance(K:10%, L:15%, M:20%, N:30%)

◆ Applications

—Note PC power system, incl. IMVP-6

—DC/DC Converters, etc.

◆Introduction

—Soft saturation.

—High current, low DCR, high efficiency.

—Very low acoustic noise and very low leakage flux noise.

—High reliability.

—100% Lead(Pb)-Free and RoHS compliant.

—Operating temperature -55~+125℃(Including self - temperature rise)

◆ Dimensions

Unit: mm

Type	A	B	C	D	E	F
SDCR6028	6.0±0.20	6.0±0.20	3.0 MAX	5.0 REF	1.85 REF	2.3 REF

◆ Design as Customer’s Requested Specifications.

◆ Electrical Characteristics

SDCR6028 Type

San Ding Part No.	Inductance (μH)	Tolerance	Test Freq.	DCR (mΩ) TYP	DCR (mΩ) Max	Irms (A) ΔT ≦40℃	Isat (A) ΔL/L0≦30%
SDCR6028-1R0N	1.0	±30%	100KHZ/0.25V	15.00	20.00	5.50	8.00
SDCR6028-1R5N	1.5	±30%	100KHz/0.25V	18.00	25.00	5.20	7.00
SDCR6028-2R2M	2.2	±20%	100KHz/0.25V	21.00	28.00	4.50	6.00
SDCR6028-3R3M	3.3	±20%	100KHz/0.25V	32.00	40.00	3.50	4.50
SDCR6028-4R7M	4.7	±20%	100KHz/0.25V	40.00	45.00	3.00	4.00
SDCR6028-5R6M	5.6	±20%	100KHz/0.25V	50.00	60.00	2.50	3.50
SDCR6028-6R8M	6.8	±20%	100KHz/0.25V	55.00	65.00	2.40	3.20
SDCR6028-100M	10	±20%	100KHz/0.25V	70.00	85.00	2.00	2.50
SDCR6028-120M	12	±20%	100KHz/0.25V	80.00	96.00	1.90	2.40
SDCR6028-150M	15	±20%	100KHz/0.25V	100.00	125.00	1.80	2.30
SDCR6028-220M	22	±20%	100KHz/0.25V	150.00	185.00	1.40	1.90
SDCR6028-270M	27	±20%	100KHz/0.25V	185.00	210.00	1.30	1.60
SDCR6028-330M	33	±20%	100KHz/0.25V	200.00	260.00	1.20	1.40
SDCR6028-470M	47	±20%	100KHz/0.25V	350.00	410.00	1.00	1.30
SDCR6028-560M	56	±20%	100KHz/0.25V	360.00	420.00	0.90	1.10
SDCR6028-680M	68	±20%	100KHz/0.25V	400.00	500.00	0.85	1.00
SDCR6028-820M	82	±20%	100KHz/0.25V	550.00	680.00	0.80	0.90
SDCR6028-101M	100	±20%	100KHz/0.25V	620.00	750.00	0.75	0.85
SDCR6028-151M	150	±20%	100KHz/0.25V	800.00	860.00	0.60	0.65
SDCR6028-221M	220	±20%	100KHz/0.25V	1300.00	1600.00	0.50	0.55
SDCR6028-331M	330	±20%	100KHz/0.25V	1850.00	2400.00	0.45	0.50
SDCR6028-471M	470	±20%	100KHz/0.25V	2400.00	3200.00	0.32	0.35
SDCR6028-681M	680	±20%	100KHz/0.25V	4300.00	5500.00	0.30	0.32
SDCR6028-821M	820	±20%	100KHz/0.25V	4500.00	5800.00	0.25	0.26
SDCR6028-102M	1000	±20%	100KHz/0.25V	5950.00	7800.00	0.22	0.23

Notes:

1. Test frequency : L : 100KHz/0.25V;
2. All test in 25 °C temperature.
3. Testing Instrument:L:HP4285A,CH11025,CH3302,CH1320,CH1320S LCR METER / Rdc:CH16502, MICRO OHMMETER.
4. Heating Rating Current (Irms) will cause the coil temperature rise of 40℃ approximately (Δt);
5. Saturation Current (Isat) will cause L0 to drop 30% approximately.
6. The part temperature (ambient + temp rise) should not exceed 125℃ under the worst case operating condition. Circuit design, component,PCB trace size and thickness airflow and other cooling provisions all could affect the part temperature. Part temperature should be verified in the end application.
7. Special inquiries besides the above common used types can be met on your requirement.

Mechanical Reliability		
Item	**Specification and Requirement**	**Test Method**
Solderability	1. No case deformation or change in visual 2. New solder coverage More than 95%	1.Preheat: 155°C±5°C , 60S±2S. 2.Tin: lead-free. 3.Temperature:240°C±5°C, flux 3.0S±0.5S.
Mechanical shock	1. No case deformation or change in visual 2. △L/Lo≦±10%	1. Acceleration: 100G 2. Pulse time:: 6ms 3. 3 times in each positive and negative direction of 3 mutual perpendicular directions
Mechanical vibration	1. No case deformation or change in visual 2. △L/Lo≦±10%	1. Reflow: 2times 2. Frequency: 10HZ～50HZ～10HZ, 20 Min/Cycles 3. Amplitude: 1.52 mm±10% 4. Directions: X,Y,Z 5. Time: 12 cycle / direction

Endurance Reliability		
Item	**Specification and Requirement**	**Test Method**
Thermal Shock	Inductance change: Within ± 10% Without distinct damage in visual	1. First -55°C for 30 minutes, last 125°C for 30 minutes as 1 cycle. Go through 1000 cycles. 2. Max transfer time is 3 minutes. 3. Measured at room temperature after placing for 24 ±2 hours
Humidity Resistance	Inductance change: Within ± 10% Without distinct damage in visual	1.Reflow 2 times, 2.85°C±3°C,85%±3%RH,1000 hours 3.Measured at room temperature after placing for 24 ±2 hours
Low temperature storage	Inductance change: Within ± 10% Without distinct damage in visual	1. Temperature: -55 ± 2°C 2. Time: 1000 hours 3. Measured at room temperature after placing for 24 ±2 hours
High temperature storage	Inductance change: Within ± 10% Without distinct damage in visual	1. Temperature: +125 ± 2°C 2. Time: 1000 hours 3. Measured at room temperature after placing for 24 ±2 hours

◆ Recommended Soldering Technologies

(1)Re-flowing Profile

1. Solder on PCB to Reflow test Peak Temp. 260±5℃ 5～10 secs ,Cycles:2 times..Re-flowing Profile: Please refer to Fig-1
2. Test board thickness: 1.5mm
3. Test board material: glass epoxy resin
4. The specimen shall be stored at standard atmospheric conditions for 1 hour, after which the measurement shall be made.product showed no damage under microscope.(for microscope of Shun Yu SZM-45 20X)

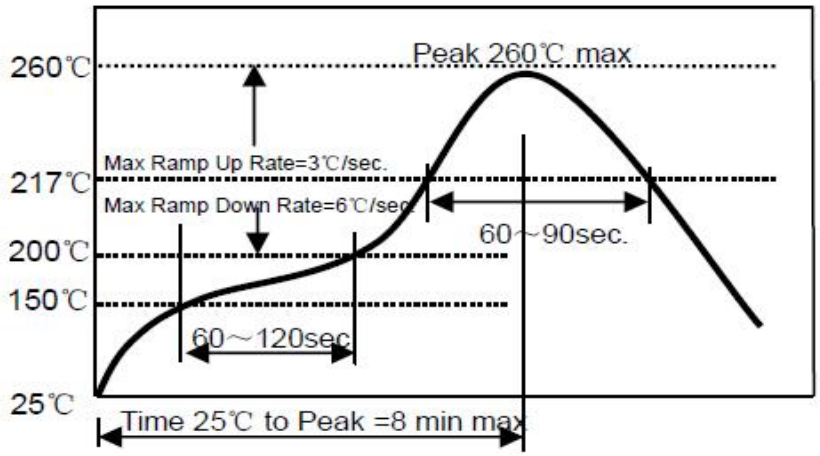

(2)Iron Soldering Profile

1. Temperature and time: -40℃ for 30±3 min→125℃ for 30±3min,please refer to Fig-2
2. Transforming interval: Max. 3 Min
3. Tested cycle: 1000 cycles
4. The specimen shall be stored at standard atmospheric conditions for 1 hour, after which the measurement shall be made.

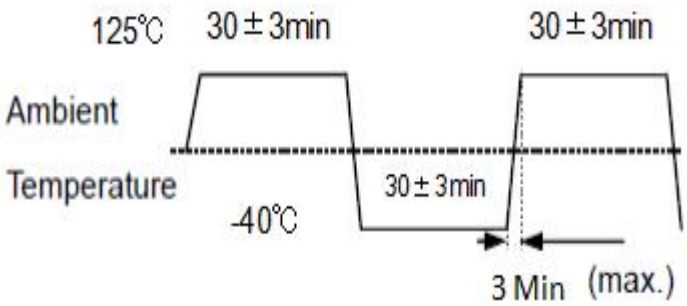

◆ Packaging Information

(1) Tape Packaging Dimensions (Unit: mm)

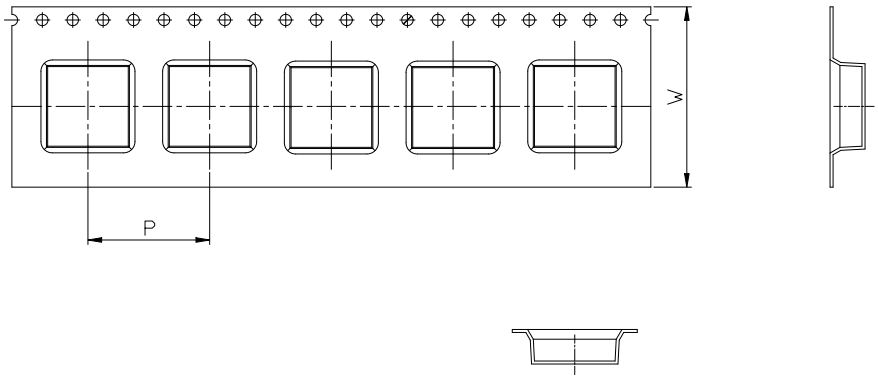

W	16
P	8

Taping Drawings (UNIT:mm)

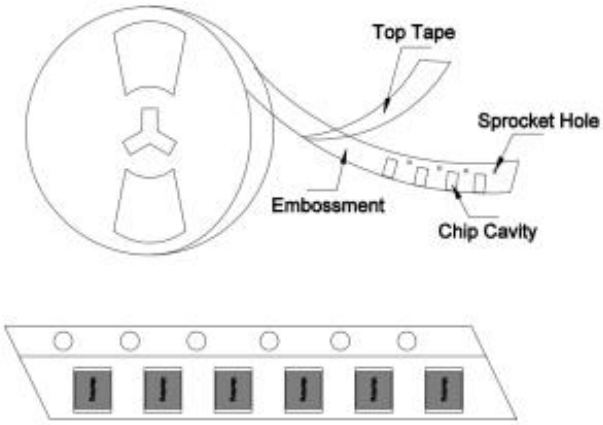

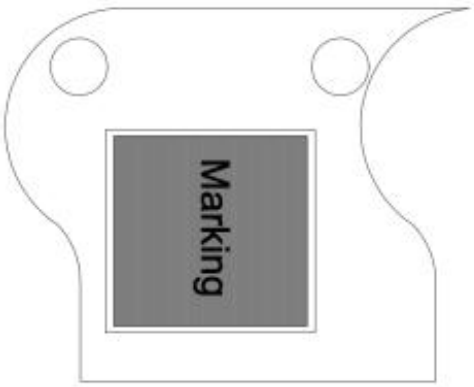

备注：产品编好带后，卷盘的最外层为 400mmMIN,最里层为 400mmMIN.

(2) Reel Dimensions (Unit: mm)

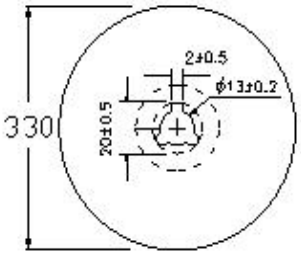

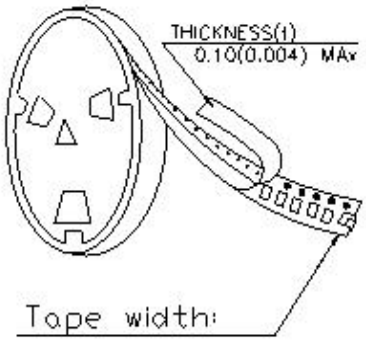

(3) Peel force of top cover tape

The peel speed shall be about 300mm/minute

The peel force of top cover tape shall be between 0.1 to 1.3 N

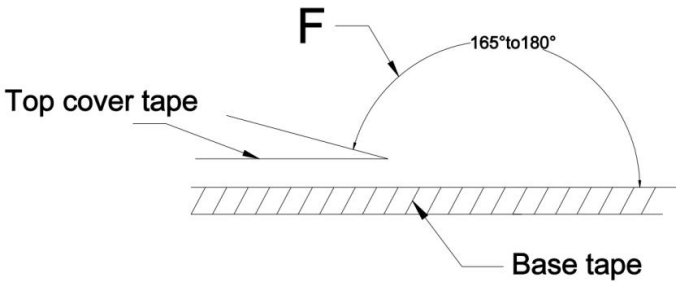

(4) Reel Label

Label on the reel

- Customer's part Number
- Lot Number
- Quantity
- date code

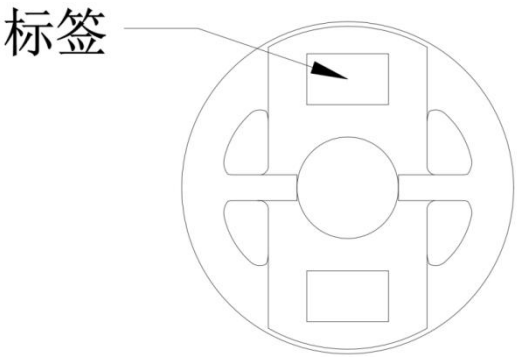

Shipping Label

- Customer's part Number
- Manufacturer's part Number
- Quantity
- date code

（5）PACKING LIST / 包装方式：

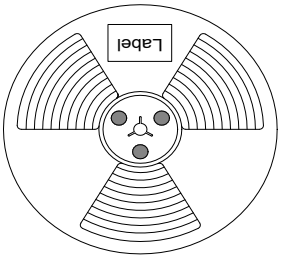

1、卷盘规格：13'(直径 330mm)　　数量：2000PCS/卷盘

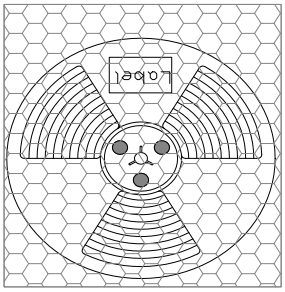

2、塑封袋包装（包裹卷盘，有利于产品保存）

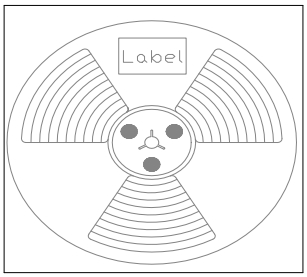

3、内盒规格：335mm*70mm*340mm　数量：6000PCS/盒

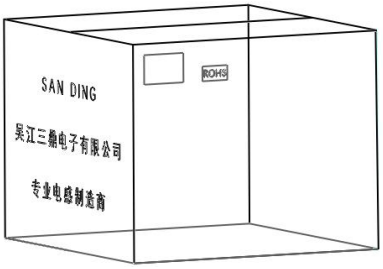

4、外箱规格：36cm*35cm*29cm　数量：24000PCS/箱

作业说明：当尾数箱不足一整箱时需用内盒或填充物装满